Location: _____

MIFAB® FS1940-FL

12” X 12” X 10” STAINLESS STEEL FLOOR AREA & INDIRECT SANITARY WASTE DRAIN WITH FLANGE

Specification: MIFAB Series FS1940-FL, 12” x 12” x 10” deep 16 gauge, All Type 304 (CF8) stainless steel sanitary floor area and indirect waste drain complete with cast stainless steel secured rim and grate with allen key vandal proof stainless steel screws, stainless steel anchor flange with weepholes and anti-splash dome strainer.

Function: Used in kitchens, restaurants, breweries, dairies, creameries, food processing locations, nuclear, gas and coal fired power stations, chemical plants, laboratories and other areas where the corrosion resistance of Type 304 stainless steel is required for superior sanitation. The anchor flange is designed to receive water proofing membrane. A membrane clamp (Suffix -C) is recommended to secure the water proofing membrane to the anchor flange.

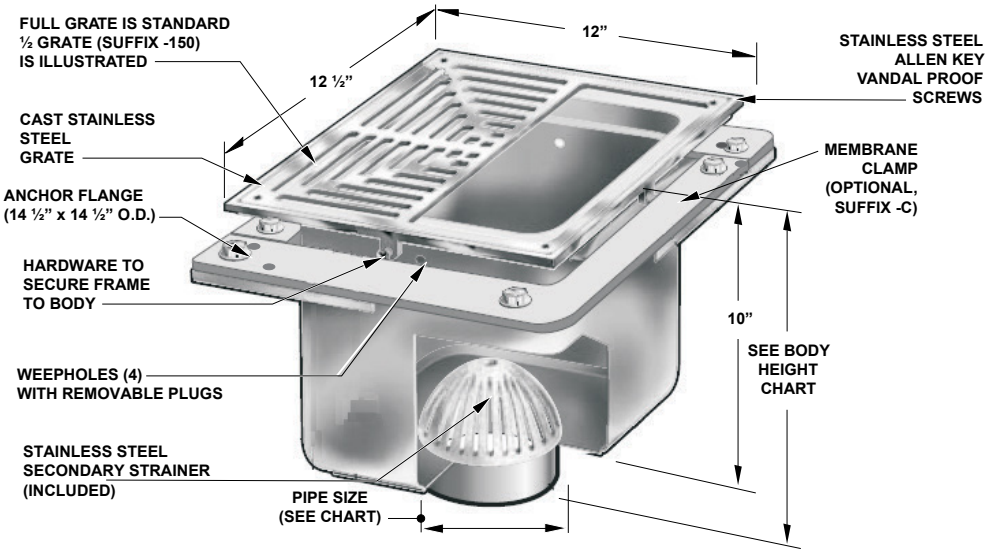

PIPE SIZE	BODY HEIGHT				
	THREADED (T)	INSIDE CAULK (X)	PVC (-30) / ABS (-31)	NO HUB (STANDARD)	PUSH ON (P)
◯ 2” (51)	☐ 12 5/8" (321)	☐ 14 1/8" (359)	☐ 13" (330)	☐ 13 3/8" (340)	☐ 13 3/4" (349)
◯ 3” (76)	☐ 13" (330)	☐ 14 1/8" (359)	☐ 13 5/8" (346)	☐ 13 3/8" (340)	☐ 13 3/4" (349)
◯ 4” (102)	☐ 13" (330)	☐ 13 7/8" (352)	☐ 13 7/8" (352)	☐ 13 1/2" (343)	☐ 13 3/4" (349)

	Suffix	Description
☐	-1	Full NB grate and frame
☐	-3	Full SS grate and frame
☐	-5	Sediment bucket (FS1700-PB-3)
☐	-6	Security screws (H-1039A, 4 pcs) (-1, -3 only)
☐	-7	Trap seal primer connection
☐	-8	Backwater Valve (BV1250 Series) (2”, 3”, 4”)
☐	-9	Hinged grate (-3 only)
☐	-21	Secondary flat strainer (FD-9600 Series)
☐	-22	Less grate
☐	-28	Stainless Steel A1 body outlet
☐	-30	PVC socket connection W/A.R.E. Body (2”, 3”, 4”)
☐	-31	ABS socket connection W/A.R.E. body (2”, 3”, 4”)
☐	-32	Deep seal trap (2”, 3”, 4” no hub) (MI-950 Series)
☐	-50	A.R.E. coated cast iron funnel
☐	-51	2 ½” round center hole in grate (-1, -3 only)
☐	-83	Stainless steel mesh screen over sediment bucket (add to S.S. Bucket)

☐	-90	Threaded side outlet
☐	-90NH	No hub side outlet
☐	-95	Client logo (-1, -3 only)
☐	-150	1/2 grate
☐	-175	3/4 grate
☐	-BA	Buy American Act compliant product
☐	-PA	Pennsylvania Steel Act compliant product
☐	-C	Membrane clamp
☐	-F4	4” round funnel
☐	-F6	6” round funnel
☐	-G	4” x 9” oval funnel
☐	-J	3” x 1” oval funnel
☐	P	Push on outlet (2”, 3” or 4”)
☐	(Standard)	No hub outlet
☐	T	Threaded outlet (2”, 3” or 4”)
☐	X	Inside caulk outlet (2”, 3” or 4”)
☐	-Z	Extended wide elastomeric flange (with -FL only)

CALIFORNIA PROPOSITION 65 WARNING. This product contains chemicals known to the State of California to cause cancer and birth defects or other reproductive harm.

Job Name: _____ Page No: _____

Section No: _____ Contractor: _____

Schedule No: _____ Purchase Order No: _____

MIFAB® *reserves the right to make changes in material and design without formal notice and obligation.*

USA: 1-800-465-2736 www.mifab.com CAN: 1-800-387-3880